CONTENTS

1. Scope

This specification is applied to the dynamic speaker which is used all of the electrical acoustic product.
-- compact, rich sound
-- applications: car speaker,TV speaker, etc. ..

2. General

2.1 Out-Diameter : 90x50 mm

2.2 Height : 40 mm

2.3 Weight : 117.5 g

2.4 Operating Temperature range:

-20 ~+60 ℃ without loss of function

2.5 Store Temperature range:

-25 ~+70 ℃ without loss of function

3. Electrical and Acoustic Characteristics.

Test condition : 15 ~ 35 ℃, 25% ~ 85% RH, 860~1060 mbar

No	Items	Specification
1	Impedance	16 Ω ± 20% (1Vrms at 1KHz)
2	Sound Pressure Level	90 dB ± 3dB (0.1W/0.1M Avg. at 0.5,0.6,0.8,1.0kHz)
3	Resonance Frequency	250 Hz ± 20% (LMS)
4	Frequency Range	Fo ~18KHz
5	Input Power	Rated 5 W / Max. 7 W
6	Distortion	10% Max. at 1kHz 5W
7	Buss and Rattle	Should not be audible buzzes,rattles when the 8.94V sine wave signal swept at frequency range.
8	Polarity	When supplied plus D.C. voltage to (+) terminal, the cone diaphragm must move to forward.

4. Reliability Test

After test(1~7item), the speaker S.P.L . difference shall be within ±3dB, and the appearance not exist any change to be harmful to normal operation (e.g. cracks,rusts,damages and especially distortion).

No	Items	Specification
1	High Temperature Test	After being placed in a chamber with +70 ±3 ℃ for 96 hours and then being placed in natural condition for 1 hour, speaker shall be measured.
2	Low Temperature Test	After being placed in a chamber with −25 ±3 ℃ for 96 hours and then being placed in natural condition for 1 hour, speaker shall be measured.
3	Humidity Test	After being placed in a chamber with 85 to 90%R.H. at +40±2 ℃ for 96 hours and then being placed in natural condition for 1 hour, speaker shall be measured.
4	Thermal Shock Test	After being placed in a chamber at +60 ℃ for 1 hour, then speaker shall be placed in a chamber at −20℃ for 1 hour(1 cycle is the below diagram). After 4 above cycles, speaker shall be measured after being placed in natural condition for 10 Sec.. 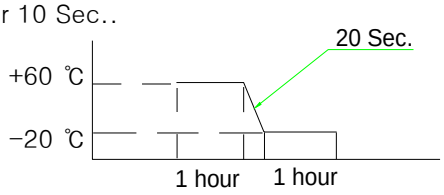
5	Vibration Test	After being applied vibration of amplitude of 1.5mm with 10 to55Hz band of vibration frequency to each of 3 perpendicular directions for 1 hour, then placed in natural condition for 1 hour, speaker shall be measured.
6	Drop Test	The speaker when mounted in the jig which weight 85g~100g, shall with stand 15 times random drops from a height of 1.0 meter to a concrete floor faced with 5mm thick hard wood board.and be nothing mechanical damage.
7	Load test	After being applied loading white noise with input power 5W(8.94Vrms.) for 96 hours, then placed in natural condition for 1 hour, speaker shall be measured.
8	Insulation test	When they are measured with DC 100V the insulation resistance between v.c. terminal and frame must be more than 1 MΩ

5. Measurement Block Diagram & Response curve

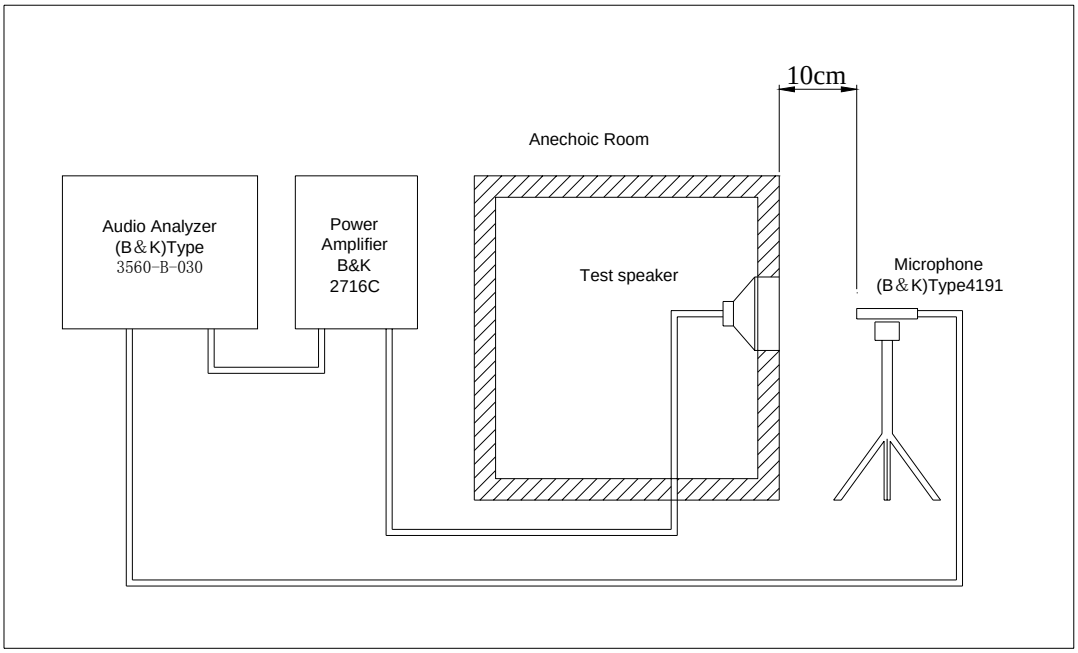

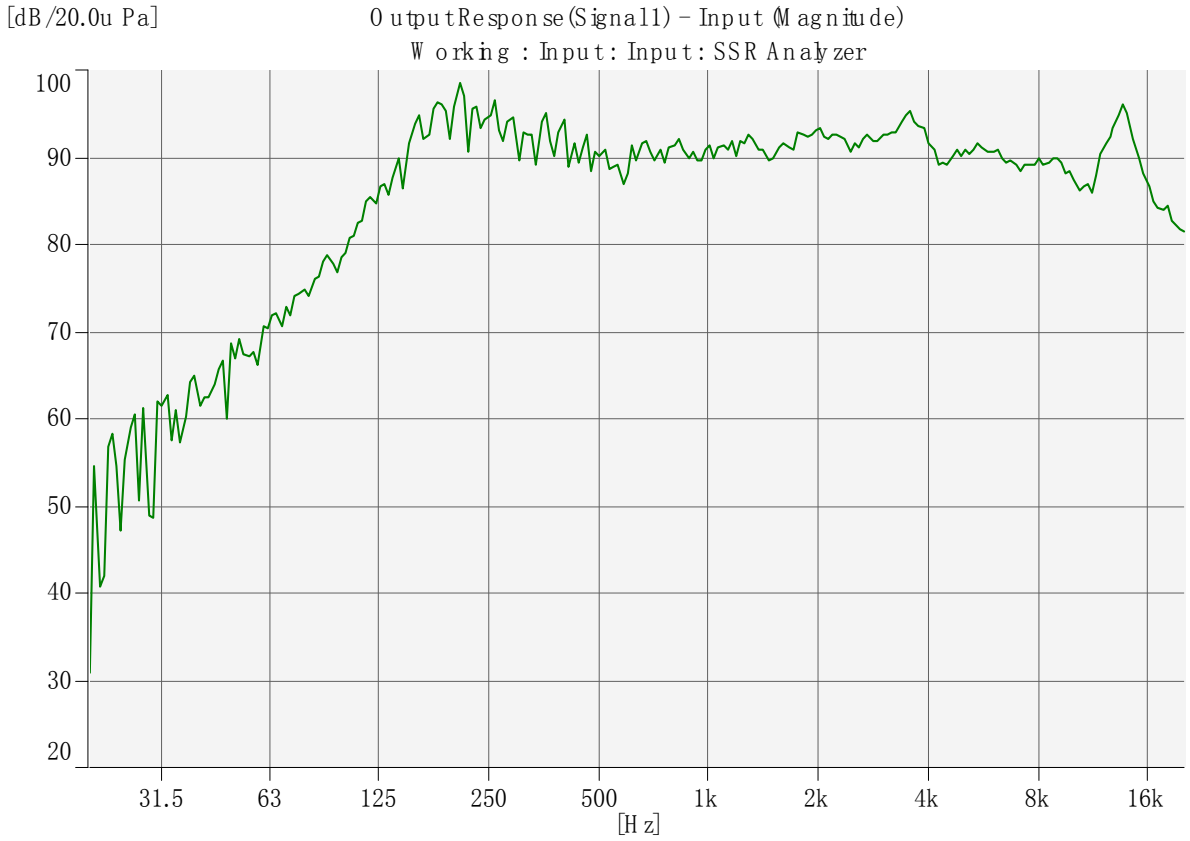

6. Structure

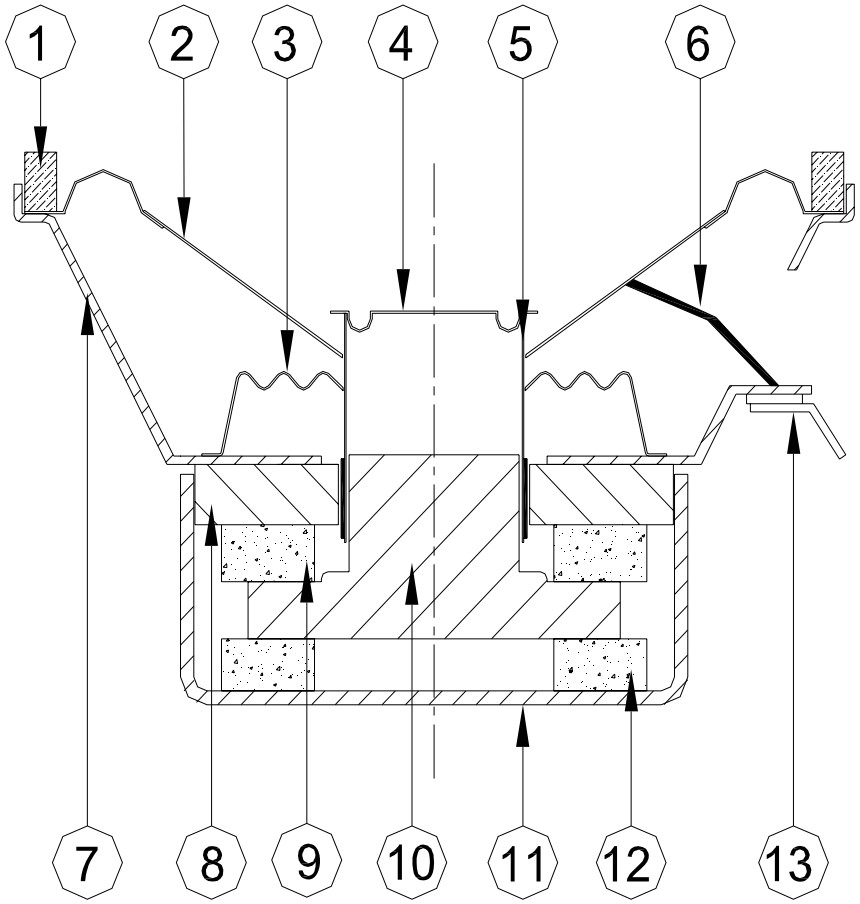

No.	Part Name	Q'ty	Material	Remarks
13	Connection	1	Paper+Copper	
12	Magnet	1	Ferrite	
11	Back Cap	1	SPCC	
10	T yoke	1	Q195	
9	Magnet	1	Ferrite	
8	Plate	1	Q195	
7	Frame	1	SPCC	
6	Wire	2	Copper	
5	Voice Coil	1	Paper+Copper	
4	Dust Cap	1	Paper	
3	Damper	1	Cotton	
2	Diaphragm	1	Cloth+Paper	
1	Gasket	1	Paper	

7. Dimensions

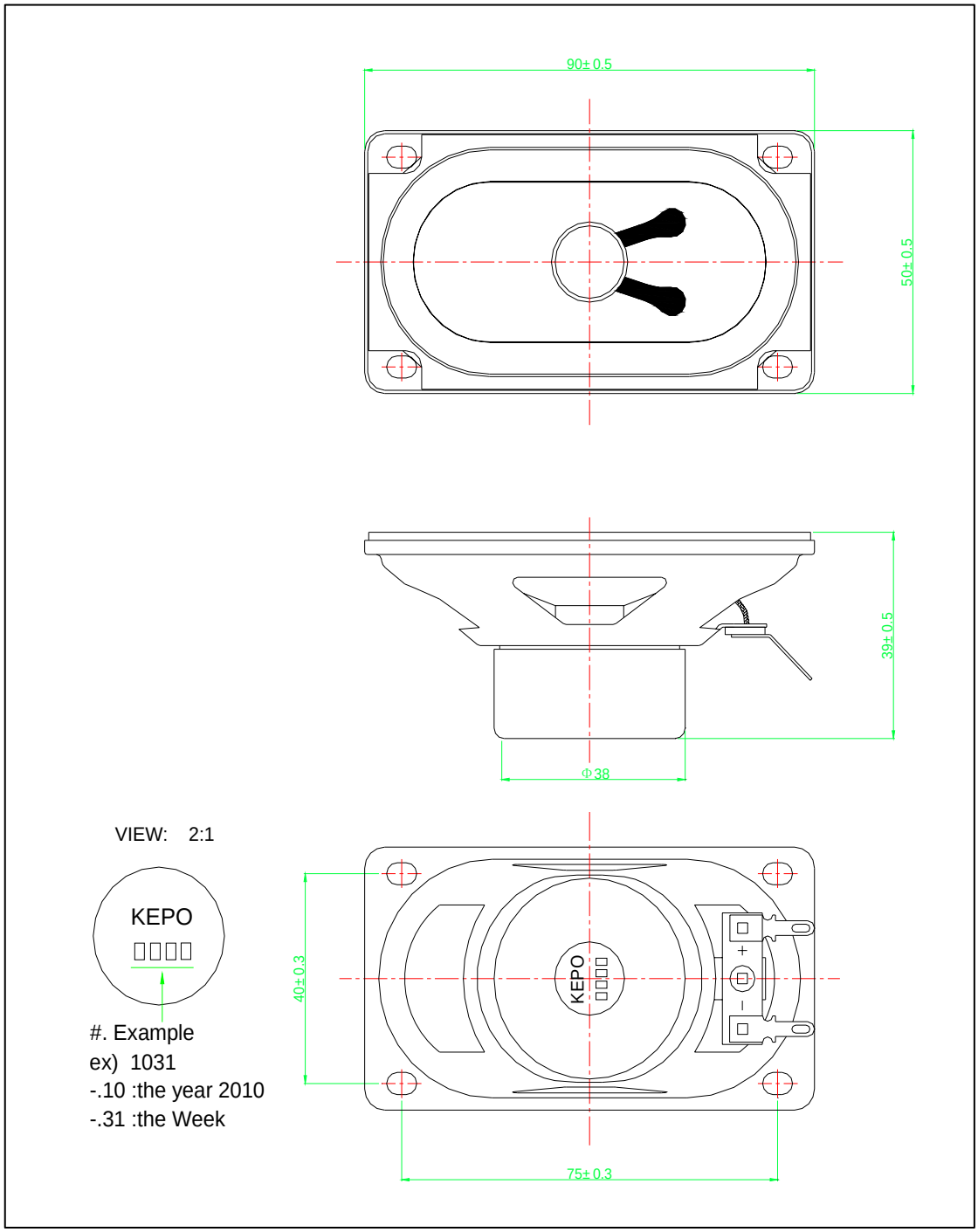

FIRST ANGLE PROJECTION

UNIT : mm

Tolerance : ±0.5

8. Packing

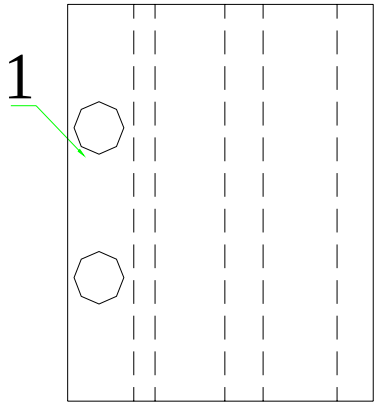

2Pcs

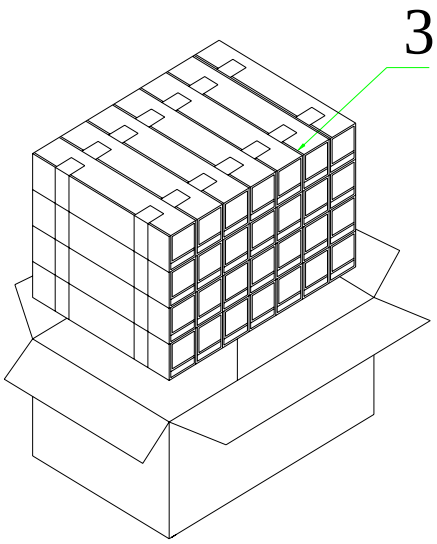

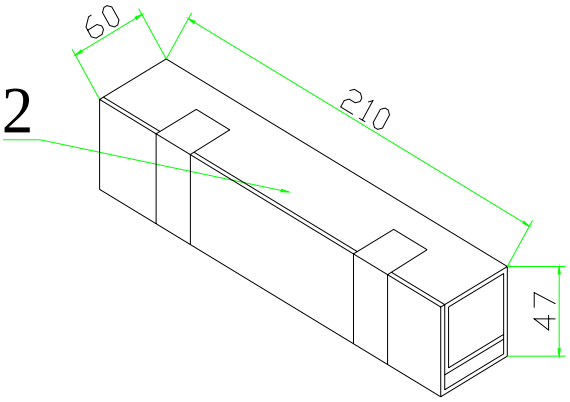

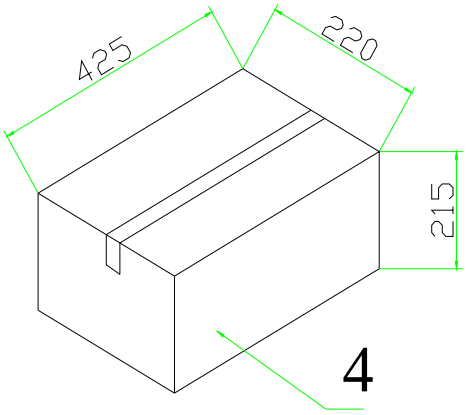

QTY:98Pcs

425 x220 x315

9. Revision

Rev. No.	DATE	PAGE	DESCRIPTION	BOM
1.0	2009-6-17		Primary	1.0
1.1	2010.03.02		Packing change	
1.2	2010.07.19		LOGO change	